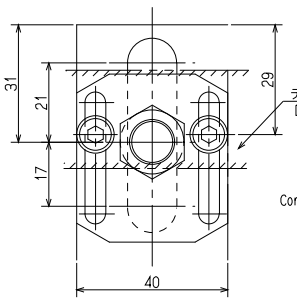

矢視Q
See Q

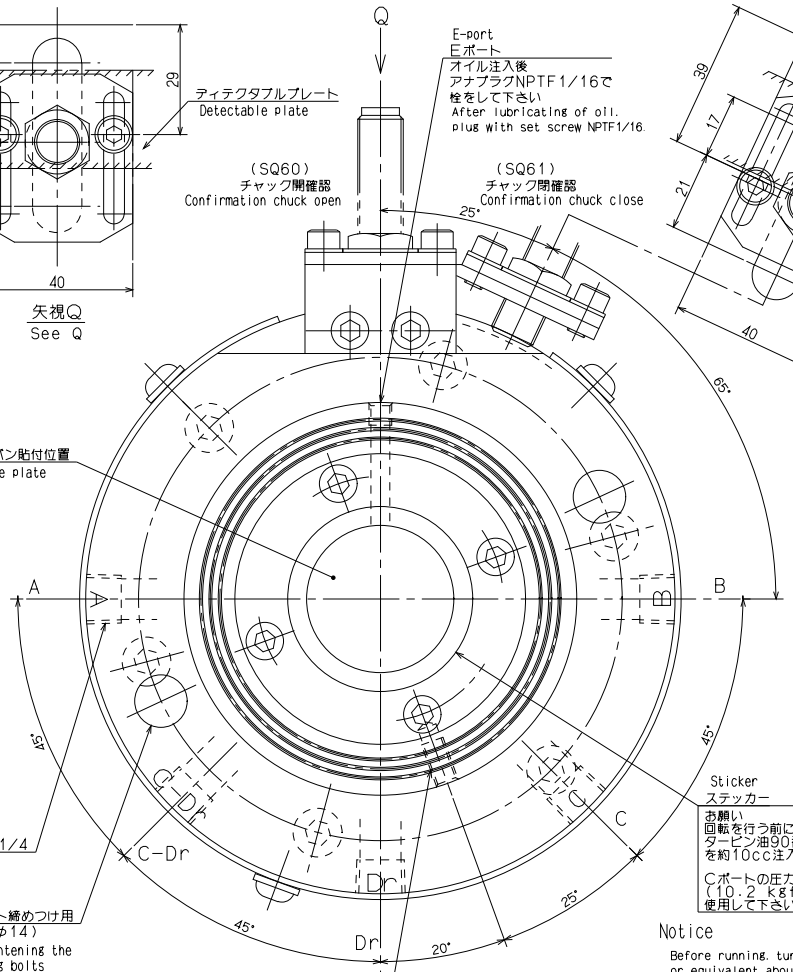

Notice

Before running, turbine oil #90 or equivalent about 10cc should be supplied from E port.

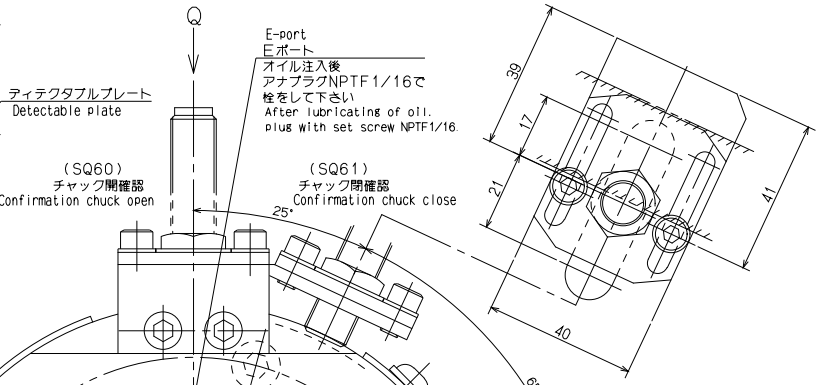

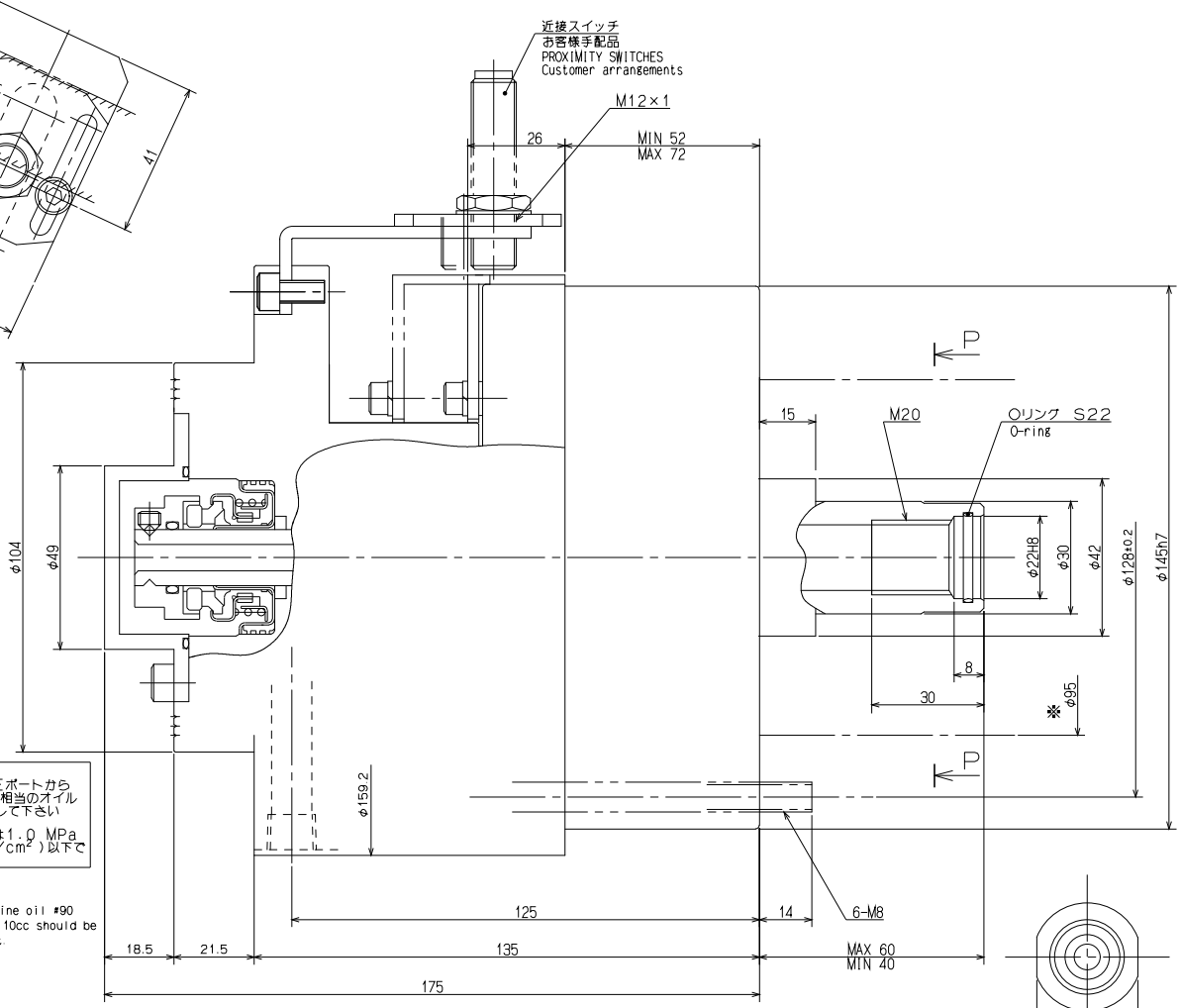

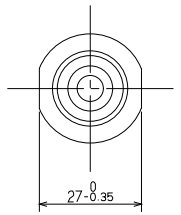

断面P－P
Section P-P

要注意

1. シリンダアダプタ内径寸法(※印)を MAX φ95 に設計して下さい

NOTE

1. Design the inner dia.(mark ※) of cylinder adapter should be max. φ95

MECHANICAL SEAL SPEC.	
APPLICATION FLUID	COOLANT(2~3cst)
MODEL	EH700-15
TEMPERATURE	NORMAL
MAX.PRESSURE	1.0 MPa
MAX.SPEED	6000 min^{-1}

1. 回転を行う前にEポートからタービン油90番相当のオイルを約10cc必ず注入して下さい。注入しない場合、メカニカルシールが壊れるおそれがあります。
2. 回転中は切削水を流し続けて下さい。
3. エア使用は避けて下さい。故障の原因となります。

1. Before running, turbine oil #90 or equivalent about 10cc should be supplied from E port. If not, mechanical seal would be serious damage.
2. During rotating, coolant should be supplied continuously.
3. Air could not be used, and it would be caused for damages.

SPECIFICATIONS		
PISTON DIA	110	mm
PISTON STROKE	20	mm
PISTON THRUST (AT 3.5 MPa) PUSH	28	kN
PISTON THRUST (AT 3.5 MPa) PULL	27	kN
MAX. OPERATING PRESSURE	3.5	MPa
MAX. SPEED	6000	min^{-1}
MASS	8.5	kg
MOMENT OF INERTIA	0.016	$kg \cdot m^2$
OIL LEAKAGE ISO VG 32, 50℃, 3.0MPa	1.2	ℓ/min

CAREER			SCALE 1:1	TYPE M1120HB21N	WEIGHT kg
MANAGER	CHIEF	DRAWN BY	3RD ANGLE	NAME 回転油圧シリンダ ROTARY HYDRAULIC CYLINDER M1120HB21N ガイケイ M1120HB21N OUTSIDE VIEW	
Kitagawa Corporation		DATE		DRW NO. 61R 25 5432 4	