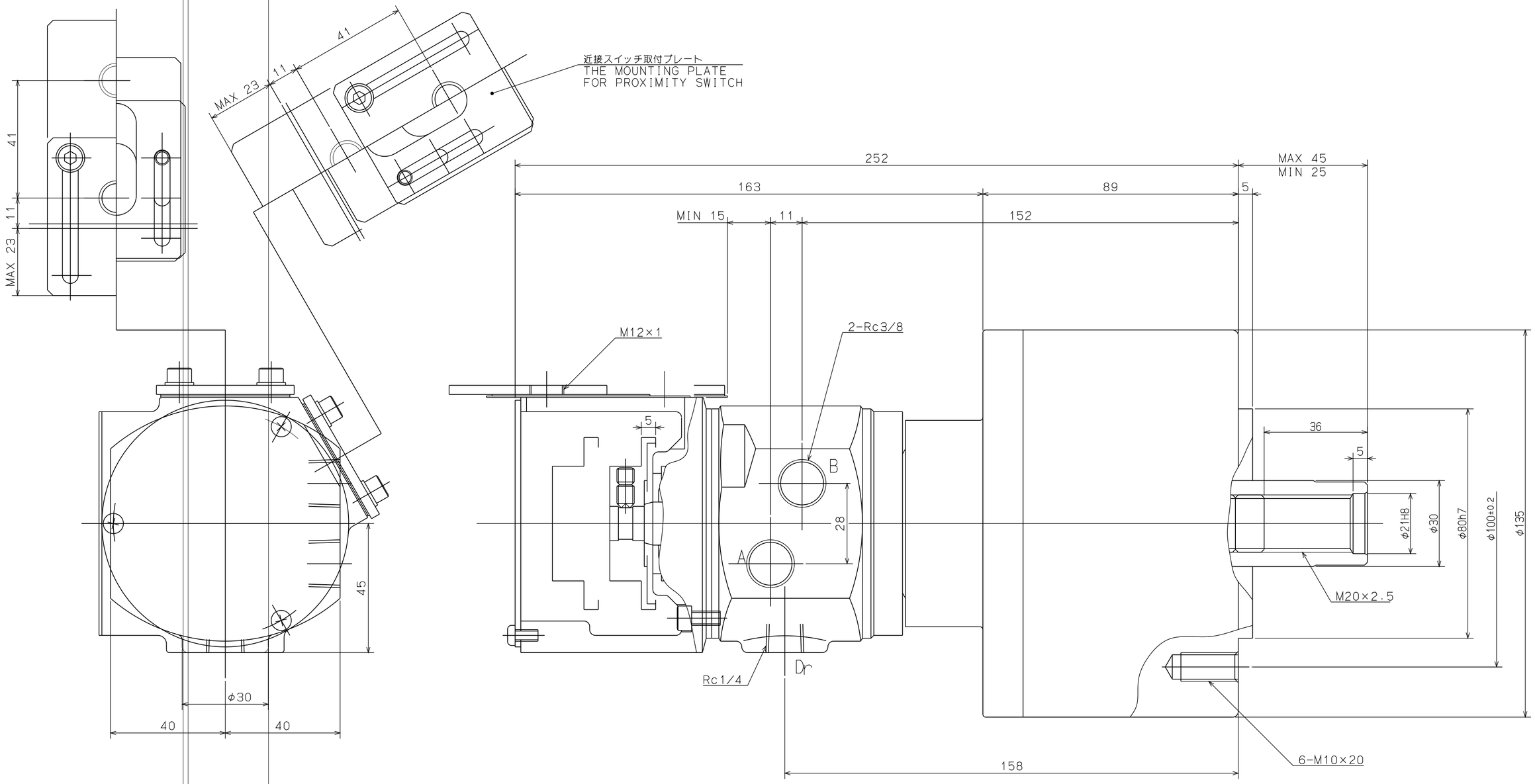

SPECIFICATIONS	
PISTON DIA	105 mm
PISTON STROKE	20 mm
PISTON THRUST PUSH (AT 4 MPa)	31 kN
PULL	29 kN
MAX. OPERATING PRESSURE	4 MPa
MAX. SPEED	6000 min^{-1}
MASS	7.6 kg
MOMENT OF INERTIA	0.013 $kg \cdot m^2$
OIL LEAKAGE ISO.VG 32.50℃.3.0MPa	0.8 L/min

CAREER		SCALE 1:1	TYPE	Y1020RE47	WEIGHT kg
MANAGER	CHIEF	DRAWN BY	NAME	回転油圧シリンダ ROTARY HYDRAULIC CYLINDER	
		3RD ANGLE		Y1020RE47 ガイケイ Y1020RE47 OUTSIDE VIEW	
Kitagawa Corporation		DATE	DRW NO.	61R 23 0681	1