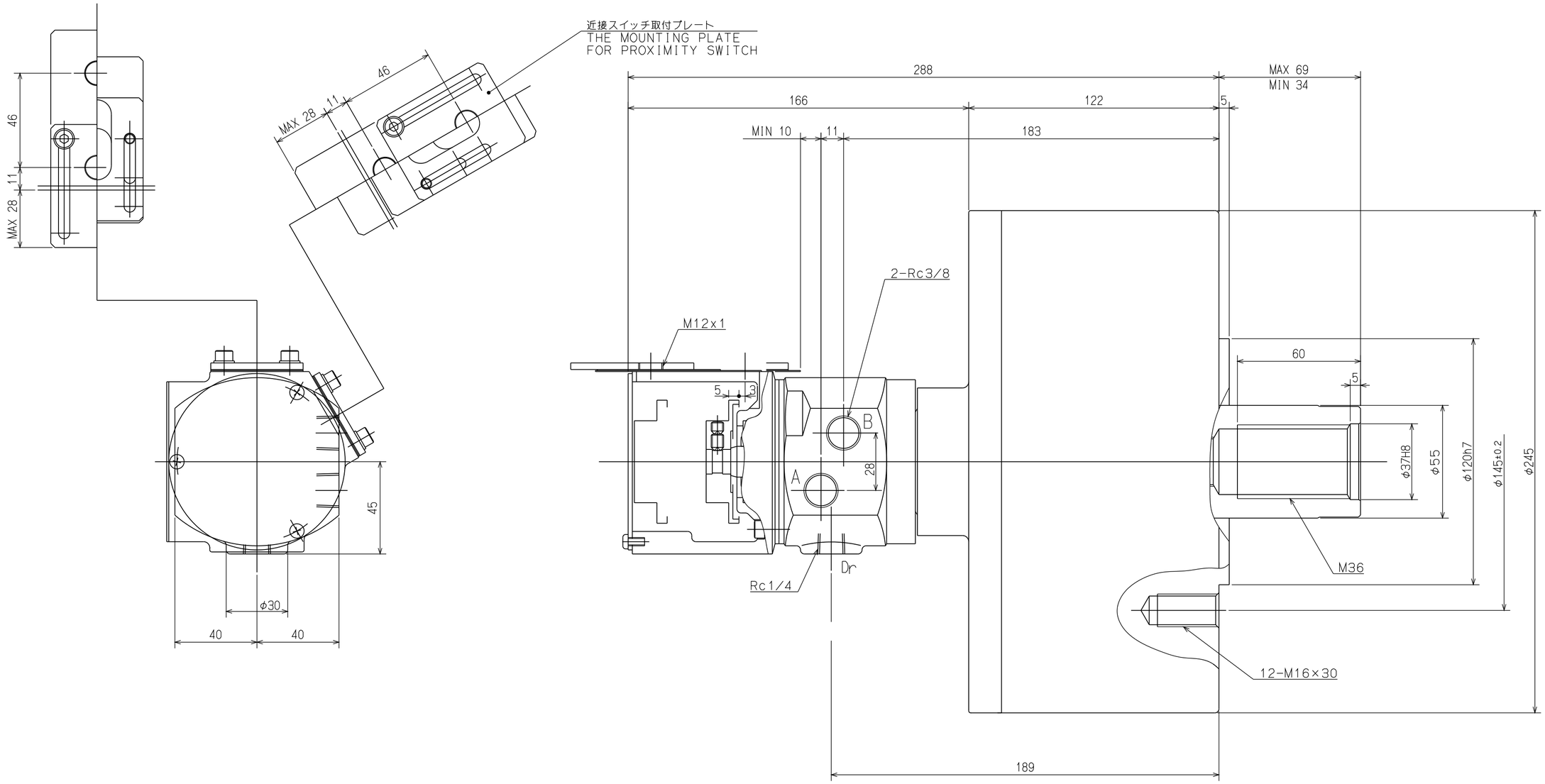

SPECIFICATIONS		
PISTON DIA	200	mm
PISTON STROKE	35	mm
PISTON THRUST (AT 4.0 MPa) PUSH	117	kN
PULL	108	kN
MAX. OPERATING PRESSURE	4.0	MPa
MAX. SPEED	5500	min^{-1}
MASS	22.5	kg
MOMENT OF INERTIA	0.098	$kg \cdot m^2$
OIL LEAKAGE ISO.VG 32,50℃,3.0MPa	0.8	L/min

CAREER			SCALE	TYPE	Y2035RE47	WEIGHT	kg
			2:3	NAME	回転油圧シリンダ ROTARY HYDRAULIC CYLINDER		
MANAGER	CHIEF	DRAWN BY	3RD ANGLE		Y2035RE47 ガイケイ Y2035RE47 OUTSIDE VIEW		
Kitagawa Corporation		DATE		DRW NO.	61R	23	0137 △1